Email: sales@autel.com
Web: www.autel.com

Quick Reference Guide

MaxiIM IM608

MaxiIM IM608

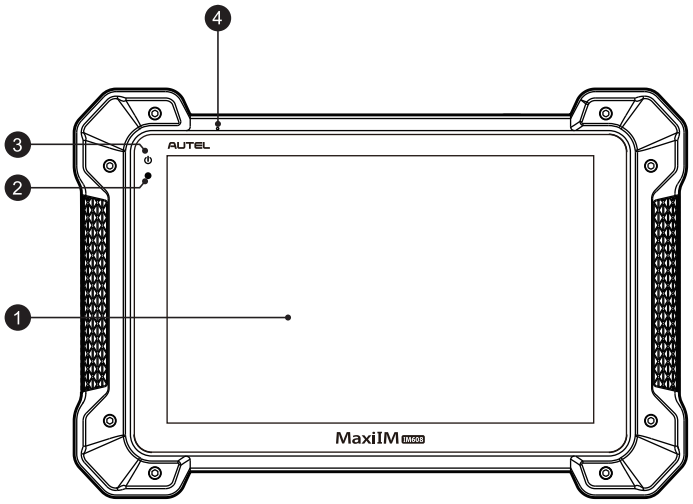

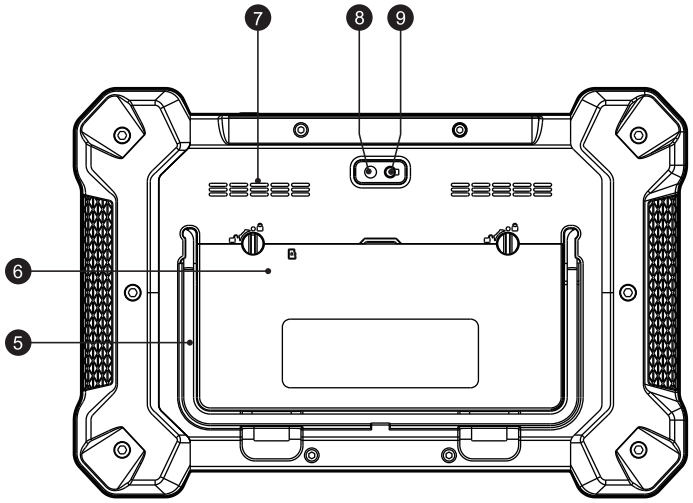

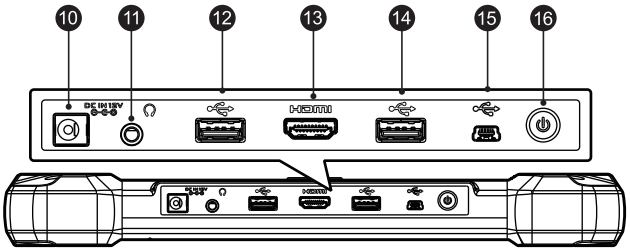

1. 10.1-inch LCD Capacitive Touchscreen
2. Ambient Light Sensor – detects ambient brightness.
3. Power LED – indicates battery level & charging or system status.
4. Microphone
5. Collapsible Stand – extends from the back to allow hands-free viewing of the Display Tablet.
6. Built-in Battery
7. Loudspeaker
8. Camera Lens
9. Camera Flash
10. DC Power Supply Input Port
11. Headphone Jack
12. USB Port
13. HDMI (high-definition multimedia interface) Port
14. USB Port
15. Mini USB Port
16. Lock/Power Button – turns the device on & off with long press, or locks the screen with short press.

MaxiFlash JVCI

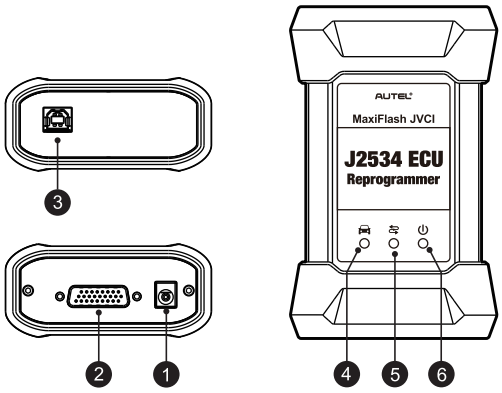

1. Power Port – connects the device and the power source with the adapter.
2. Vehicle Connector – connects the device to the vehicle's DLC via a standard high density DB-26 MVCI – OBDII cable.
3. USB Port
4. Vehicle LED
5. Connection LED
6. Power LED

XP400

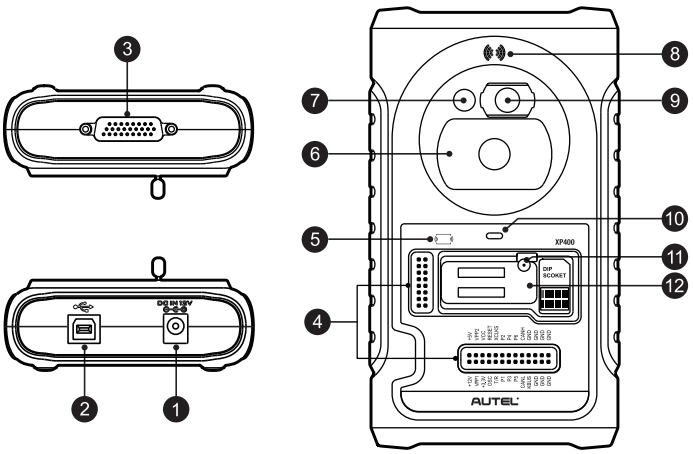

1. DC Port – provides 12V DC power supply.
2. USB Port – provides data communication and 5V DC power supply.
3. DB26-Pin Port – connects with the Mercedes Benz infrared cable, vehicle key cable, ECU cable, MCU cable, MC9S12 cable. It cannot be directly connected to the vehicle's OBD connector.
4. Cross Signal Pins – holds the MCU board, MCU spare cable or DIY signal interface.
5. IC Card Induction Area
6. Vehicle Key Slot – holds the vehicle key.
7. Vehicle Transponder Slot – holds the vehicle transponder.
8. Remote Control Chip Induction Area
9. Benz Infraed Key Slot – holds the Benz infraed key.
10. Status LED Light – indicates the current operating status.
11. Locker – locks the EEPROM component chip slot to ensure proper functioning.
12. EEPROM Component Chip Slot – holds the EEPROM plug-in chip or EEPROM socket.

Safety Information

For your own safety and the safety of others, and to prevent damage to the device and vehicles upon which it is used, it is important that the safety instructions presented throughout this manual be read and understood by all persons operating or coming into contact with the device.

There are various procedures, techniques, tools, and parts for servicing vehicles, as well as in the skill of the person doing the work. Because of the vast number of test applications and variations in the products that can be tested with this equipment, we cannot possibly anticipate or provide advice or safety messages to cover every circumstance. It is the automotive technician's responsibility to be knowledgeable of the system being tested. It is crucial to use proper service methods and test procedures. It is essential to perform tests in an appropriate and acceptable manner that does not endanger your safety, the safety of others in the work area, the device being used, or the vehicle being tested.

Before using the device, always refer to and follow the safety messages and applicable test procedures provided by the manufacturer of the vehicle or equipment being tested. Use the device only as described in this manual. Read, understand, and follow all safety messages and instructions in this manual.

Safety Messages

Safety messages are provided to help prevent personal injury and equipment damage. All safety messages are introduced by a signal word indicating the hazard level.

DANGER

Indicates an imminently hazardous situation which, if not avoided, will result in death or serious injury to the operator or to bystanders.

WARNING

Indicates a potentially hazardous situation which, if not avoided, could result in death or serious injury to the operator or to bystanders.

Safety Instructions

The safety messages herein cover situations Autel is aware of. Autel cannot know, evaluate or advise you as to all of the possible hazards. You must be certain that any condition or service procedure encountered does not jeopardize your personal safety.

DANGER

When an engine is operating, keep the service area WELL VENTILATED or attach a building exhaust removal system to the engine exhaust system. Engines produce carbon monoxide, an odorless, poisonous gas that causes slower reaction time and can lead to serious personal injury or loss of life.

SAFETY WARNINGS

- Always perform automotive testing in a safe environment.
- Wear safety eye protection that meets ANSI standards.
- Keep clothing, hair, hands, tools, test equipment, etc. away from all moving or hot engine parts.
- Operate the vehicle in a well ventilated work area, for exhaust gases are poisonous.
- Put the transmission in PARK (for automatic transmission) or NEUTRAL (for manual transmission) and make sure the parking brake is engaged.
- Put blocks in front of the drive wheels and never leave the vehicle unattended while testing.
- Be extra cautious when working around the ignition coil, distributor cap, ignition wires and spark plugs. These components create hazardous voltages when the engine is running.
- Keep a fire extinguisher suitable for gasoline, chemical, and electrical fires nearby.
- Do not connect or disconnect any test equipment while the ignition is on or the engine is running.
- Keep the test equipment dry, clean, free from oil, water or grease. Use a mild detergent on a clean cloth to clean the outside of the equipment as necessary.
- Do not drive the vehicle and operate the test equipment at the same time. Any distraction may cause an accident.
- Refer to the service manual for the vehicle being serviced and adhere to all diagnostic procedures and precautions. Failure to do so may result in personal injury or damage to the test equipment.
- To avoid damaging the test equipment or generating false data, make sure the vehicle battery is fully charged and the connection to the vehicle DLC is clean and secure.
- Do not place the test equipment on the distributor of the vehicle. Strong electro-magnetic interference can damage the equipment.

COMPLIANCE

This device complies with Part 15 of the FCC rules and Industry Canada's license-exempt RSSs. Operation is subject to the following two conditions:

1. This device may not cause harmful interference.

2. This device must accept any interference received, including interference that may cause undesired operation.

Cet appareil est conforme aux CNR exempts de licenced'Industrie Canada. Son fonctionnement est soumis aux deux conditions suivantes:

1. Ce dispositif ne peut causer des interferences; et

2. Ce dispositif doit accepter toute interférence, y compris les interférences qui peuvent causer un mauvais fonctionnement de l'appareil.

WARNING

Changes or modifications not expressly approved by the party responsible for compliance could void the user's authority to operate the equipment.

NOTE

This equipment has been tested and found to comply with the limits for a Class B digital device, pursuant to Part 15 of the FCC Rules. These limits are designed to provide reasonable protection against harmful interference in a residential installation.

This equipment generates uses and can radiate radio frequency energy and, if not installed and used in accordance with the instructions, may cause harmful interference to radio communications. However, there is no guarantee that interference will not occur in a particular installation. If this equipment does cause harmful interference to radio or television reception, which can be determined by turning the equipment off and on, the user is encouraged to try to correct the interference by one or more of the following measures: I. Reorient or relocate the receiving antenna. II. Increase the separation between the equipment and receiver. III. Connect the equipment into an outlet on a circuit different from that to which the receiver is connected. IV. Consult the dealer or an experienced radio/TV technician for help.

SAR

The radiated output power of this device is below the FCC radio frequency exposure limits. Nevertheless, the device should be used in such a manner that the potential for human contact is minimized during normal operation.

The exposure standard for wireless devices employs a unit of measurement known as the Specific Absorption Rate, or SAR. The SAR limit set by the FCC is 1.6 W/Kg. Tests for SAR are conducted using standard operating positions accepted by the FCC with the device transmitting at its highest certified power level in all tested frequency bands.

Although the SAR is determined at the highest certified power level, the actual SAR level of the device while operating can be well below the maximum value. This is because the device is designed to operate at multiple power levels so as to use only the power required to reach the network. To avoid the possibility of exceeding the FCC radio frequency exposure limits, human proximity to antenna should be minimized.

RF WARNING STATEMENT

The device has been evaluated to meet general RF exposure requirement. The device can be used in portable exposure condition without restriction.

The term "IC" before the radio certification number only signifies that IC technical specifications were met.

RoHS COMPLIANCE

This device is declared to be in compliance with the European RoHS Directive 2011/65/EU.

CE COMPLIANCE

This product is declared to conform to the essential requirements of the following Directives and carries the CE mark accordingly:

EMC Directive 2014/30/EU

R&TTE Directive 1999/5/EC

Low Voltage Directive 2014/35/EU

Getting Started

IMPORTANT: Before operating or maintaining this unit, please read the quick guide and user manual carefully, pay extra attention to the safety warnings and precautions. Use this unit correctly and properly. Failure to do so may cause damage and/or personal injury and will void the product warranty.

1

- Scan QR Code to visit our website at **www.autel.com.**
- Create an Autel ID and register the product with the tablet's SN and password.

2

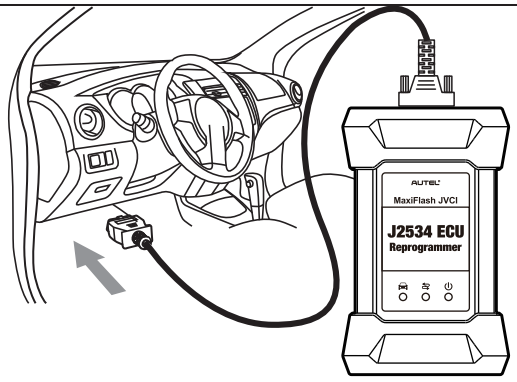

- Connect the VCI with the vehicle's DLC, which is generally located under the vehicle dash.

3

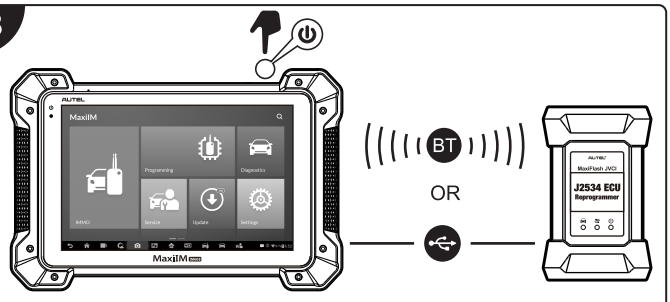

- Long press the Lock/Power button to turn on the key programming tool.
- Pair up the key programming tool with the VCI device via BT or the included USB cable (2m) to establish a communication link and your key programming tool is now ready for use.

2

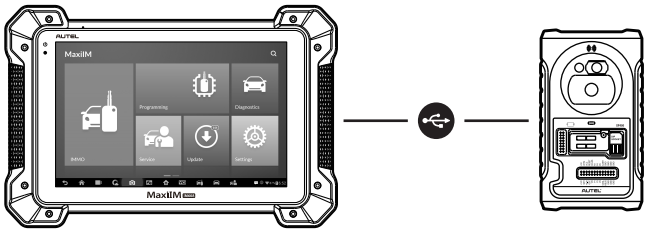

- Connect the tablet and the XP400 with the included USB cable.

4

- Software Update: connect the key programming tool to the Internet and tap Update in the MaxiIM Job Menu to view all the available updates.

Immobilizer Function

This function requires connection between the vehicle, the MaxiIM IM608 tablet and the XP400.

1

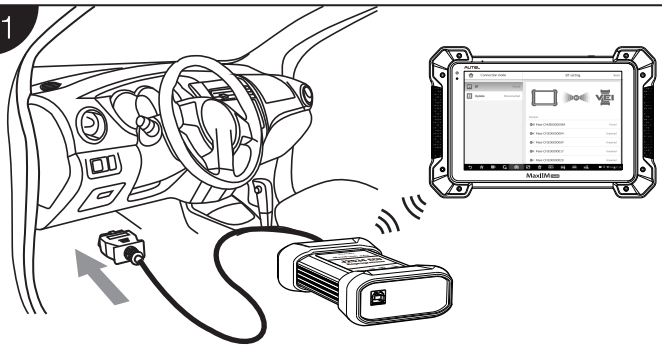

- Pair up the key programming tool with the VCI device via BT to establish a communication link with the vehicle.

Programming Function

This function requires connection between the MaxiIM IM608 tablet and the XP400.

Wireless Data Printing

Print via PC

IMPORTANT: Make sure the key programming tool is connected to the same network with the computer via Wi-Fi, and the computer is connected to a printer.

Please download the **Autel PC Suite** (**Autel printer** included) from

www.autel.com > Diagnostic Software > My Account > PC Suite Program.

- Run the **Autel Printer** on the computer which is installed after the installation of **Autel PC Suite**.
- Click **Test Print** to make sure the printer is working successfully.
- Tap **Print** on the toolbar of the key programming tool. A temporary document will be created and sent to the computer.

  - If the **Auto Print** option in the Autel Printer is selected, the Autel Printer will print the received document automatically.
  - If the **Auto Print** option is not selected, click **Open PDF** File to view all the temporary files. Select the file(s) you want to print and click **Print**.

Print via APP

If a Wi-Fi printer is available, please purchase a Wi-Fi printer APP and install it onto your key programming tool. By a simple click on the **Print** button of a saved file on the key programming tool, the file will be printed automatically.